# Quick Connectors

## MK

MK connectors have primarily been developed to reduce permeation rates. Compared with standard connectors that are prone to high permeation rates and constant micro leakage, MK provides the perfect link between the tank and the pipe system. The MK is not a standard part. All projects are based on specific customer requirements. We are therefore pleased to receive a description of your application in order to offer you an optimal, customized solution.

**Easily combined with other NORMA Group products such as:**

- S (See page 52)
- PS3
- V2 (See page 54)
- Fluid Systems (See chapter on Fluid Systems)

## *The advantages at a glance*

- Competitive price
- Can offer the complete solution and knowledge
- Full in-house production – we produce the entire system on our own from connectors to fuel lines to multi-layer lines
- Easy assembly
- Low permeation rate
- LET tube key component meets high requirement for a competitive price
- Reduces weight
- State-of-the-art lab to test products on request
- Conductive PA is possible

### Technical features

- Angle versions: 0°, 90°
- Meeting the requirements of standards as ENG 016, VW TL 82417, KT-2KDL-0802, STD-SAL 0013

## CONNECTING SPIGOT

MK connectors have been developed with the aim to achieve significantly reduced permeation rates.

MK provide a perfect link between the tank and the pipe system in cases where existing standard 1K connectors are prone to a high permeation rate while their tendency to “creep” causes additional micro leakage.

MK for the first time combine reinforced and unreinforced materials and thus enable the safe connection of the connector with the plastic fuel tank.

1. **Chemical bonding**
2. **Welded ring HDPE**
3. **Spigot PA 12 (glass fiber reinforced)**

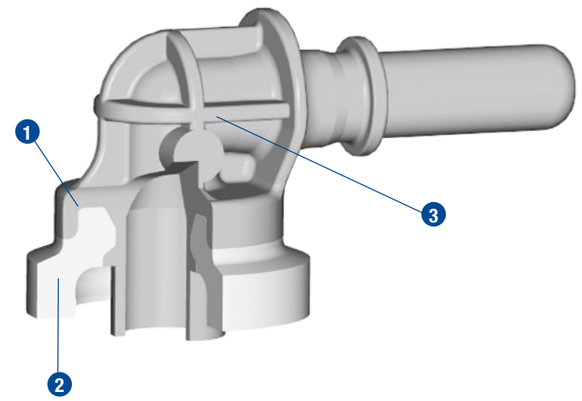


### Materials

MK combine materials that so far have been incompatible. Welded ring made from HDPE, can be welded onto the plastic fuel tank. Spigot made from Polyamide 12 with 30% glass fiber content.

### Insider tip

The perfectly matched system is achieved when combining MK connecting spigots and NORMA Group Fluid systems.

**MK are applicable for use with the following connectors:**

- SAE (e.g. S)
- VDA (e.g. PS 3)
- V2
- Firtree
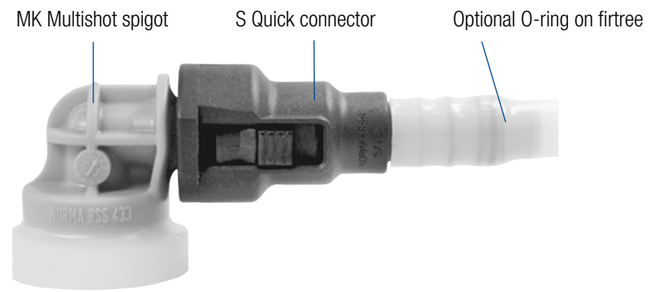
### MK with S